FMK casette filter

Modular cassette dust collector, built for continuous use in industrial process filtration and dust collection applications

The FMK25 range is a reverse jet cassette dust collector. It was built for continuous use in industrial process filtration and dust collection applications. The FMK dust collector uses our long established fabric pocket cassette that is easily maintained through the front hinged doors. The cassette offers ample filter area and lasts longer than a cartridge.
Filter cassette materials for most applications are available, dependent on dust type, dust load and efficiency requirements.

Air Volume Range: 1.700 to 10.000 m3/hr (1,000 to 6,000 CFM)

Tough galvanised steel construction.
Weatherproof for exposed locations.
Integral pre-separation chamber
All maintenance from unit front
Efficient cross flow / down flow inlet air pattern
Wide range of integral or remote fans

Inlet and outlet dimensions 160, 250, 315, 400, 500 or 560 mm.

Measurement of differential pressure and control of the cleaning system: DFC-8M, energy supply 230 V – 50 Hz, 110V - 60 Hz.

- **Bulk materials handling – conveying, screening, sieving, mixing, bin/silo venting**
- **Building materials manufacture and distribution**
- **Processes with light or medium dust loading**

Product name	FMK casette filter
Installation	Outdoor, Indoor
Material	Housing in galvanised sheet steel (2mm)
Suitable for combustible dust	True
Filter cleaning method	Pulse jet
Application	Fumes, Dust
Dustbin volume (l)	50 or 100 l or whitout
Operating Temperature	-20 to 70 Deg. C.
Filter type	Cassette filter
Filter material	Polyester
Control Voltage (V)	230V / 110V

Fumes Dust

This content is protected under copyright law, furnished for informational use only, and subject to change without notice. © Nederman Holding AB

FMK casette filter

Description	Number of filter elements	Weight (kg)	Model
FMK25 - 2E with bin for discharge	4	232 (incl. 50l bin excl. fan)	FMK25-2Eb(4)
FMK25 - 2E with bin for discharge	6	235 (incl. 50l bin excl. fan)	FMK25-2Eb(6)
FMK25 - 4E with bin for discharge	4	423 (incl. 50l bin excl. fan)	FMK25-4Eb(4)
FMK25 - 4E with bin for discharge	6	430 (incl. 50l bin excl. fan)	FMK25-4Eb(6)
FMK25 - 6E with bin for discharge	6	655 (incl. 50l bin excl. fan)	FMK25-6Eb(4)
FMK25 - 6E with bin for discharge	6	665 (incl. 50l bin excl. fan)	FMK25-6Eb(6)
FMK25 - 8E with bin for discharge	4	845 (incl. 50l bin excl. fan)	FMK25-8Eb(4)
FMK25 -8E with bin for discharge	6	860 (incl. 50l bin excl. fan)	FMK25-8Eb(6)
FMK25 - 2E hopper with flange for discharge	4	212 (excl. fan)	FMK25-2Ef(4)
FMK25 - 2E hopper with flange for discharge	6	215 (excl. fan)	FMK25-2Ef(6)
FMK25 - 4E hopper with flange for discharge	4	403 (excl. fan)	FMK25-4Ef(4)
FMK25 - 4E hopper with flange for discharge	6	410 (excl. fan)	FMK25-4Ef(6)
FMK25 - 6E hopper with flange for discharge	4	615 (excl. fan)	FMK25-6Ef(4)
FMK25 - 6E hopper with flange for discharge	6	625 (excl. fan)	FMK25-6Ef(6)
FMK25 - 6E hopper with flange for discharge	4	805 (excl. fan)	FMK25-8Ef(4)
FMK25 - 6E hopper with flange for discharge	6	820 (excl. fan)	FMK25-8Ef(6)

This content is protected under copyright law, furnished for informational use only, and subject to change without notice. © Nederman Holding AB

FMK casette filter

	Accessory	Part No
	Damper type NFUS3	5501395
	Discharge bin 50 l with wheels	5501274
	Discharge bin 50 l without wheels	5501273
	Discharge bin 100 l with wheels	5501275
	Adaptor for bin with bag	5505033
	Adaptor for 50 l bin with bag incl. fitting	5505034
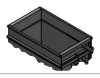	Adaptor for 100 l bin with bag incl. Fitting	5505035
	Single backpack for 4 modules	5509660
	Single backpack for 4 modules round inlet from the top	5501138
	Single backpack for 8 modules round inlet from the top pos L	5501169
	Double backpack for 4 modules	5509661
	Double backpack for 4 modules round inlet from the top	5501142
	Double backpack for 8 modules and round inlet from the top	5501175
	DUAL silencer for FM600 series fan with air grille	5501813
	DUAL silencer for FM6800 series fan with air grille	5501830
	DUAL silencer for FM1000 series fan with air grille	5501854
	DUAL silencer for FM600 series fan with air grille and rain cover	5501814
	DUAL silencer for FM6800 series fan with air grille and rain cover	5501832
	DUAL silencer for FM1000 series fan with air grille and rain cover	5501855
	DUAL silencer for FM600 series fan with flanged outlet for duct connection	5501815
	DUAL silencer for FM6800 series fan with flanged outlet for duct connection	5501833
	DUAL silencer for FM1000 series fan with flanged outlet for duct connection	5501856

This content is protected under copyright law, furnished for informational use only, and subject to change without notice. © Nederman Holding AB

FMK casette filter

	Accessory	Part No
	Isolation box for FM pressure tank, 2 modules	5501317
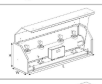	Isolation box for FM pressure tank, 4 modules	5501318
	Isolation box for FM pressure tank, 6 modules	5501319
	Isolation box for FM pressure tank, 6 modules	5501320
	Level sensor with beacon, 230V	5504475
	Cable gland M40 for levelsensor	5512245
	Noise enclosure for FM800 fan	5501783

This content is protected under copyright law, furnished for informational use only, and subject to change without notice. © Nederman Holding AB

FMK casette filter

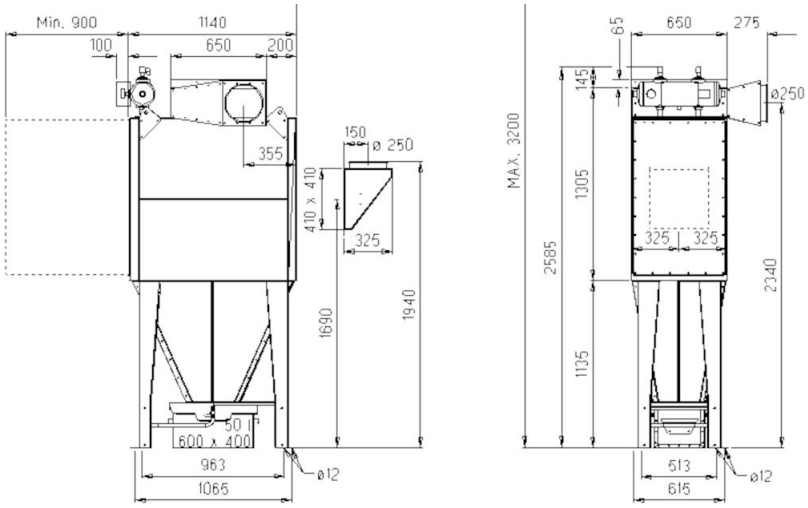

FMK(Z)25-2E Bin

All dimensions in mm.
If 50 liter bin with rollers, add 90 mm.
* 65 mm to be included at top mounted fan

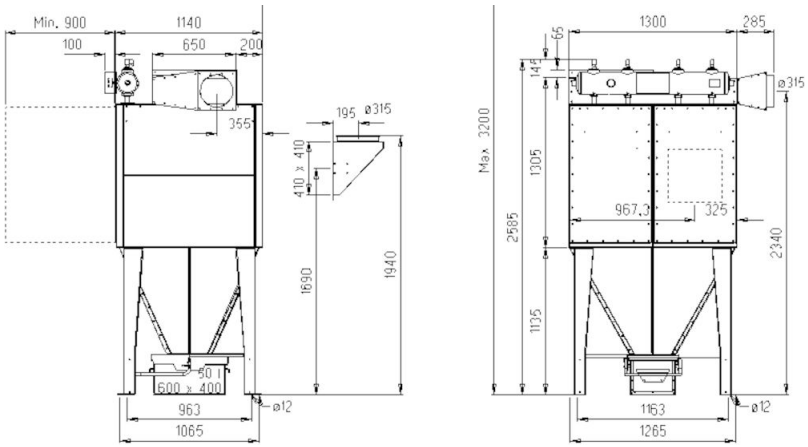

FMK(Z)25-4E Bin

All dimensions in mm.
If 50 liter bin with rollers, add 90 mm.
* 65 mm to be included at top mounted fan

This content is protected under copyright law, furnished for informational use only, and subject to change without notice. © Nederman Holding AB

FMK casette filter

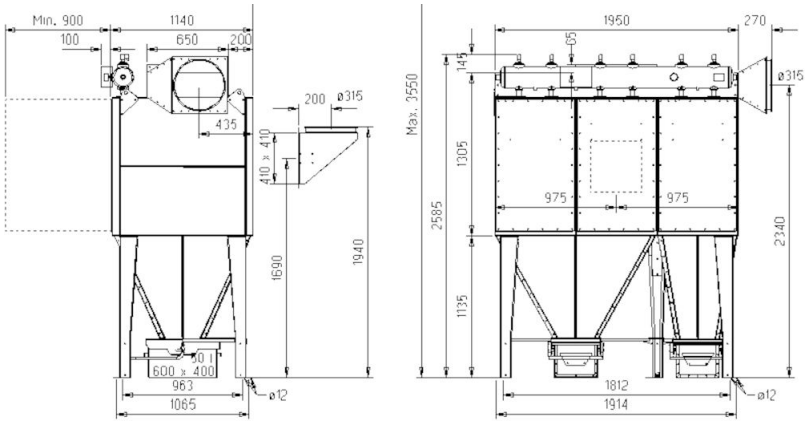

FMK(Z)25-6E Bin

All dimensions in mm.
If 50 liter bin with rollers, add 90 mm.
* 65 mm to be included at top mounted fan

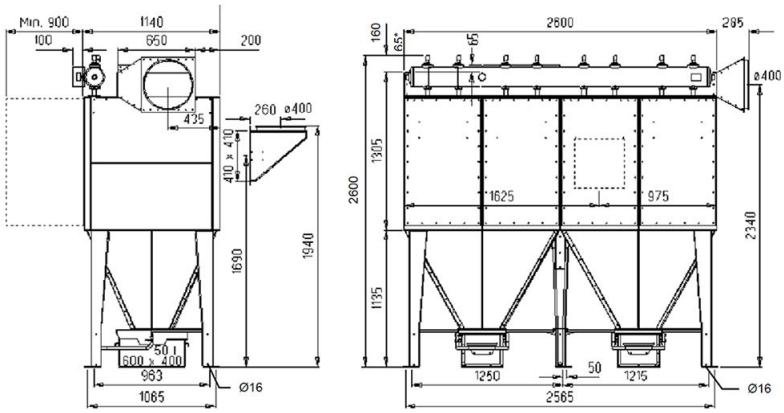

MK(Z)25-8E Bin

All dimensions in mm.
If 50 liter bin with rollers, add 90 mm.
* 65 mm to be included at top mounted fan

This content is protected under copyright law, furnished for informational use only, and subject to change without notice. © Nederman Holding AB

FMK casette filter

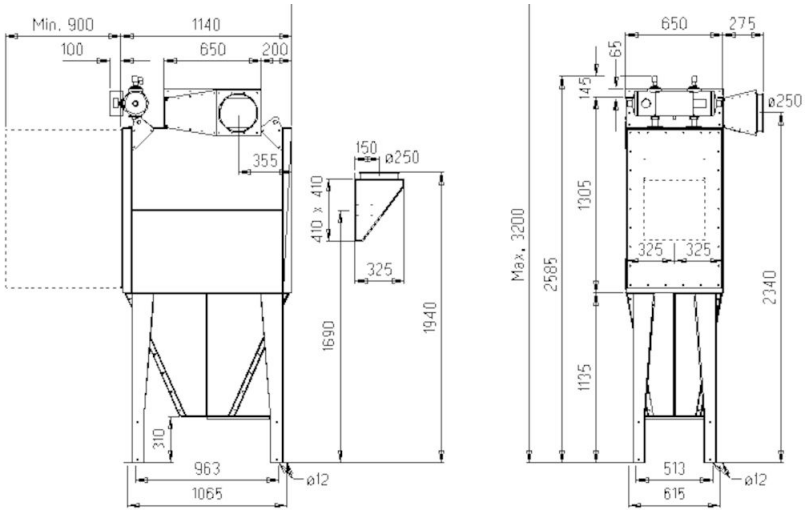

FMK(Z)25-2E Flange

All dimensions in mm.
* 65 mm to be included at top mounted fan.

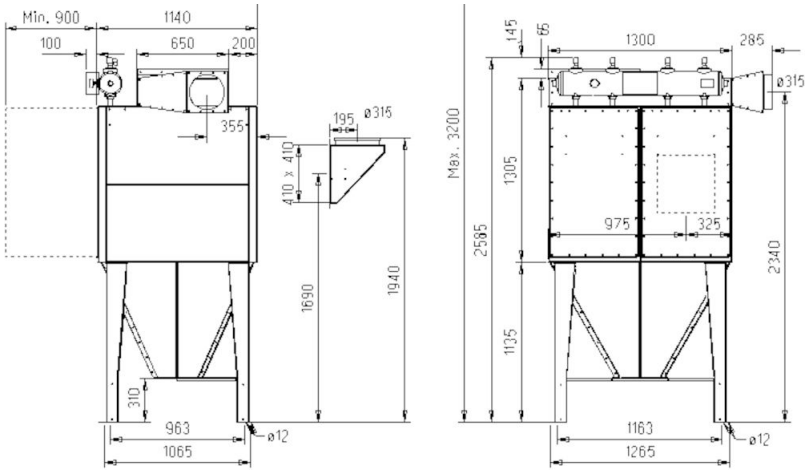

MK(Z)25-4E Flange

All dimensions in mm.
* 65 mm to be included at top mounted fan.

This content is protected under copyright law, furnished for informational use only, and subject to change without notice. © Nederman Holding AB

FMK casette filter

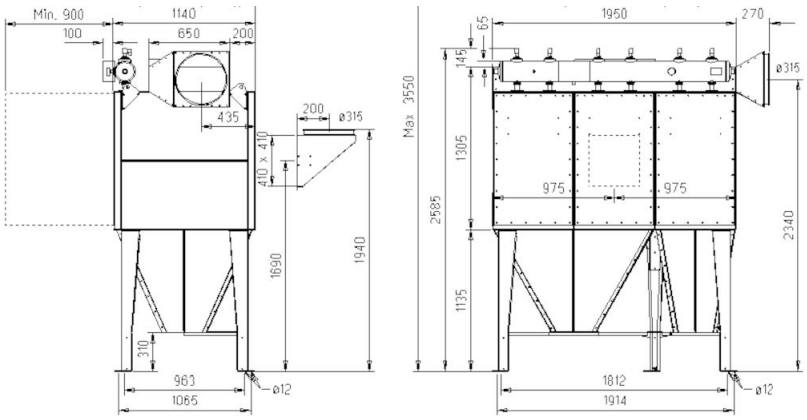

FMK(Z)25-6E Flange

All dimensions in mm.
* 65 mm to be included at top mounted fan.

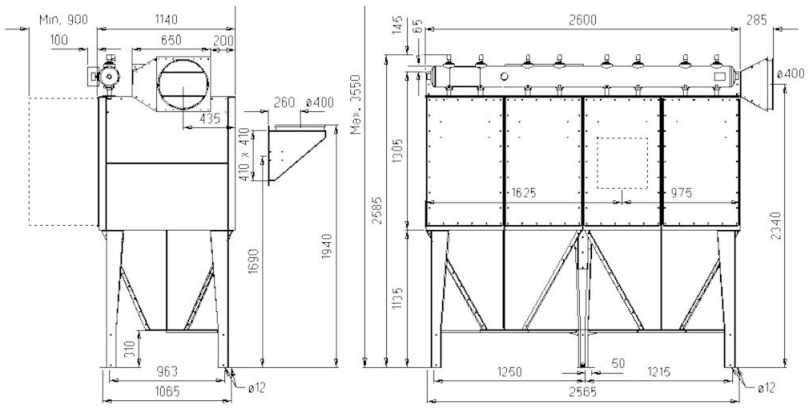

MK(Z)25-8E Flange

All dimensions in mm.
* 65 mm to be included at top mounted fan.

This content is protected under copyright law, furnished for informational use only, and subject to change without notice. © Nederman Holding AB